ROHS Compliant

THIS INFORMATION IS CONFIDENTIAL AND IS DISCLOSED TO YOU ON CONDITION THAT NO FURTHER DISCLOSURE IS MADE BY YOU TO OTHER THAN TETULL PERSONNEL WITHOUT WRITTEN AUTHORIZATION FROM TETULL LTD.

REV.	ECN NO OR DESCRIPTION	REVISED	DATE
A	PRODUCT RELEASE	BROKEN	2015.09.25
B	MODIFY	BROKEN	2018.29.23

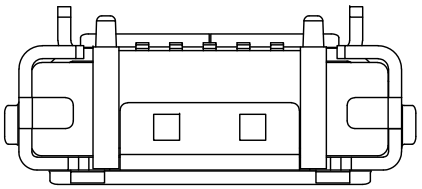

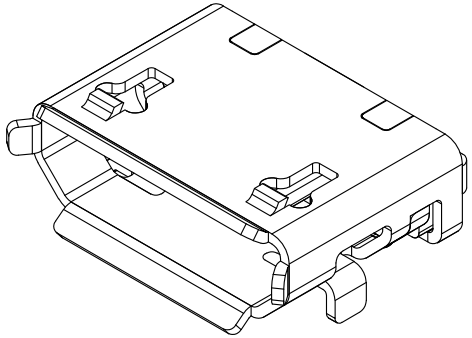

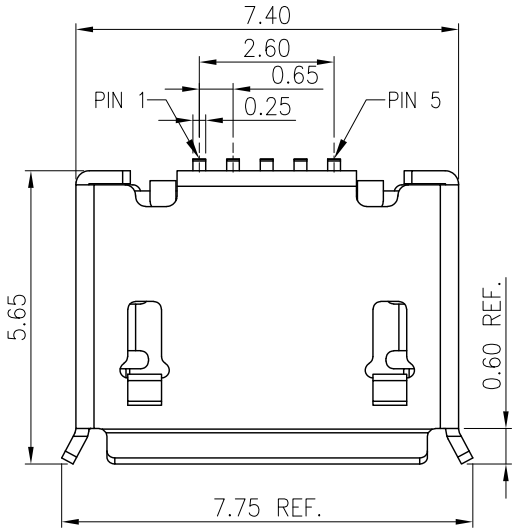

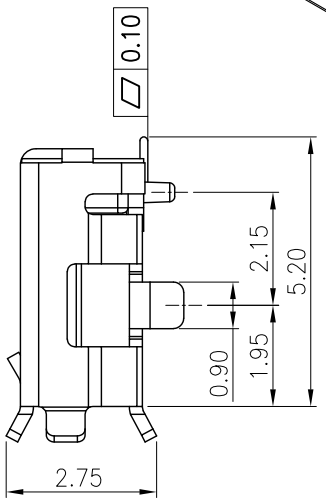

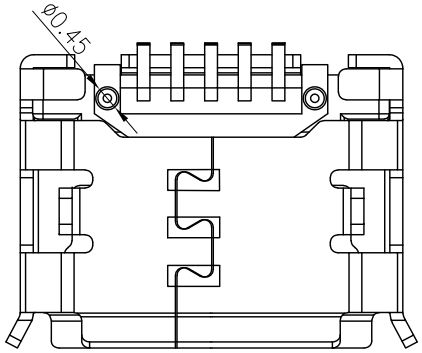

NOTE:

1. ELECTRICAL CHARACTERISTICS
1-1. VOLTAGE RATING:30V AC
1-2. CURRENT RATING:2.0A (pin1,5);0.5A (pin2,3,4)
1-3. CONTACT RESISTANCE: 50 milliohms MAX.
1-4. INSULATION RESISTANCE: 100 Megohms MIN.
1-5. DIELECTRIC WITHSTANDING VOLTAGE: 250V AC FOR 1 MINUTE.
2. MECHANICAL CHARACTERISTICS
2-1. MATING&UNMATING FORCE: 0.8kgf~3.5kgf
2-2. DURIBILITY:5000CYCLES
3. SALT SPRAY: 24H
4. OPERATING TEMPERATURE:-40°C~85°C
5. RoHS 2002/95/EC COMPLIANT.
6. MPQ : 1500PCS/REEL.

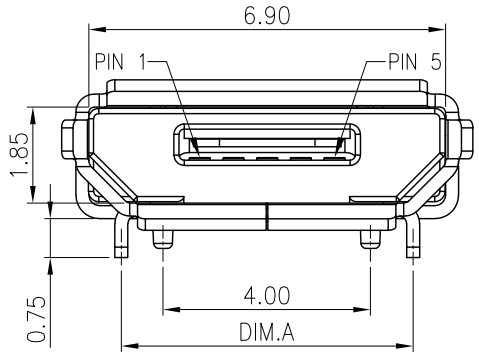

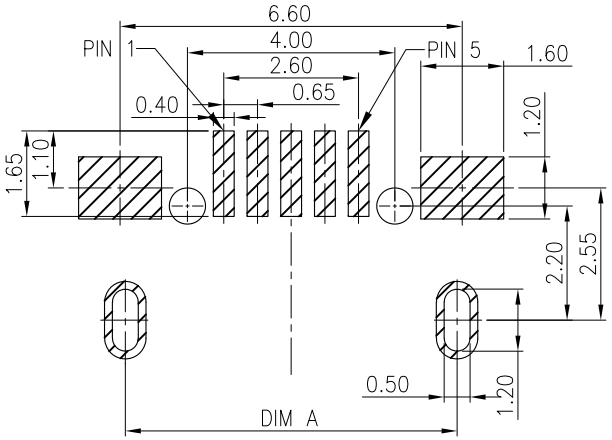

RECOMMENDED P.C.B. LAYOUT
TOLERANCE UNSPECIFIED ±0.05mm

5	GND
4	ID
3	D+
2	D-
1	VBUS
PIN	NAME
PIN ASSIGNMENT	

TABLE:

P/N.	TYPE	DIM A
1030505AR001	WITHOUT POST	6.40
1030505AR002	WITH POST	
1030505AR005	WITHOUT POST	5.65
1030505AR006	WITH POST	

NO	DESCRIPTION	QTY	MATERIAL	PLATING & COLOR
C	SHIELD	1	COPPER ALLOY 0.25±0.05T	Tin PLATED
B	TERMINAL	5	COPPER ALLOY 0.15T	Gold Flash On Contact Area Gold Flash on Solder tail All over Nickel Plated .
A	HOUSING	1	THERMOPLASTIC UL94-V0	BLACK

UNLESS OTHERWISE SPECIFED TOLERANCES

DECIMALS:
X :±0.5
X.X :±0.3
X.XX :±0.2

ANGLES:
X :±2°
X.X :±1°

TETULL

TITLE: Micro usb B 5P DIP+SMT TYPE

PART NO.	1030505AR00X	
DWN	BROKEN	2018.29.23
CHKD		
APVD		
SCALE 1:1	UNIT: mm	
CUSTOMER COPY	SIZE: A4	SHEET: 1OF1	REV: A

TETULL

TETULL CORPORATION